This document is property of Profoto and shall not without permission in writing be altered, copied, used for manufacturing or communicated to any other person or company.

Description of change
First Revision

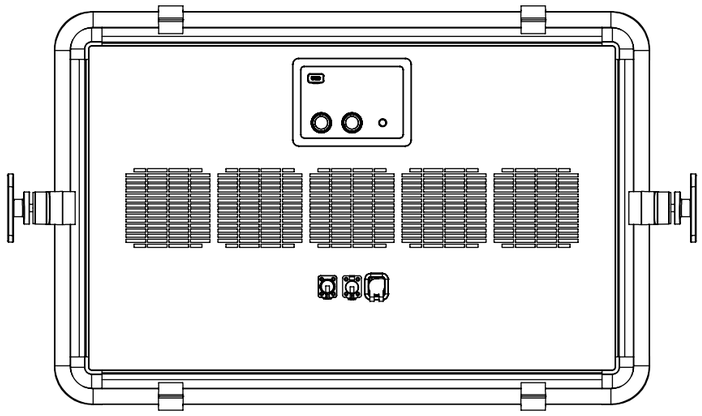

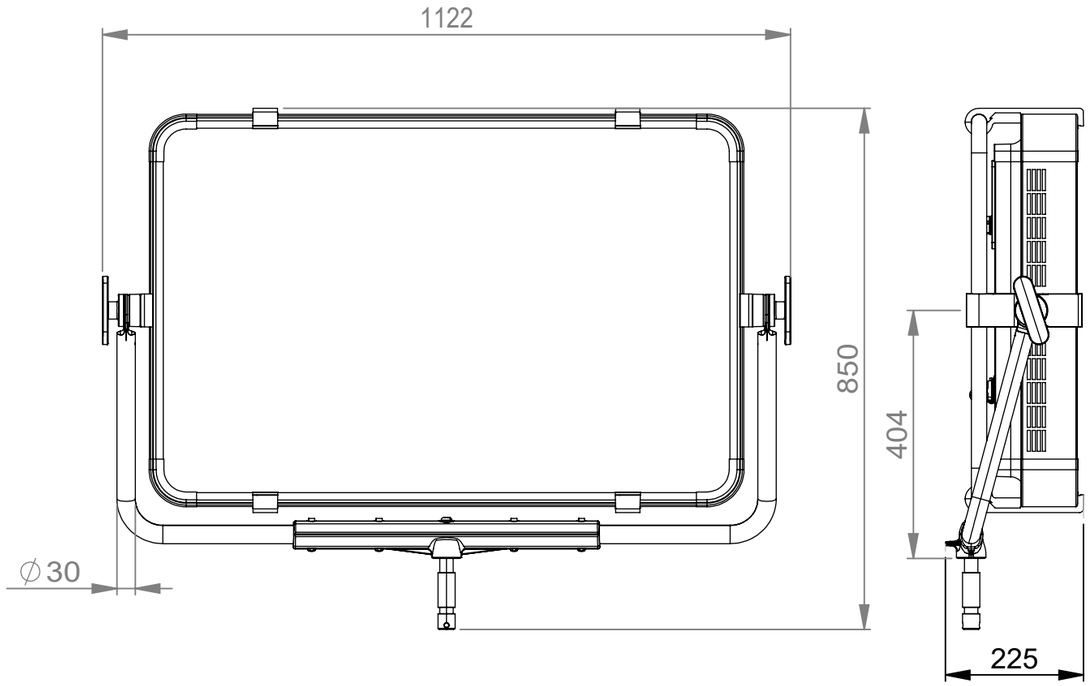

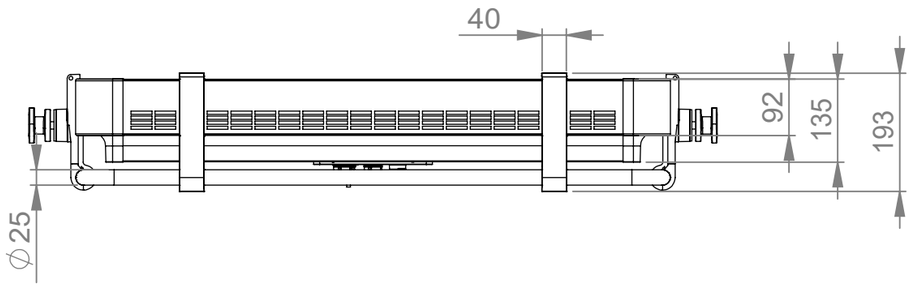

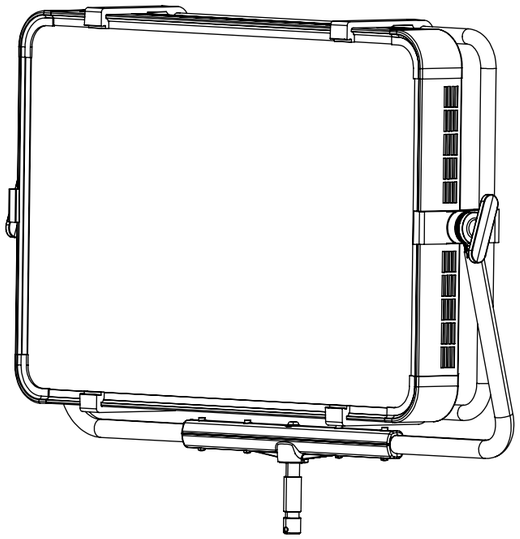

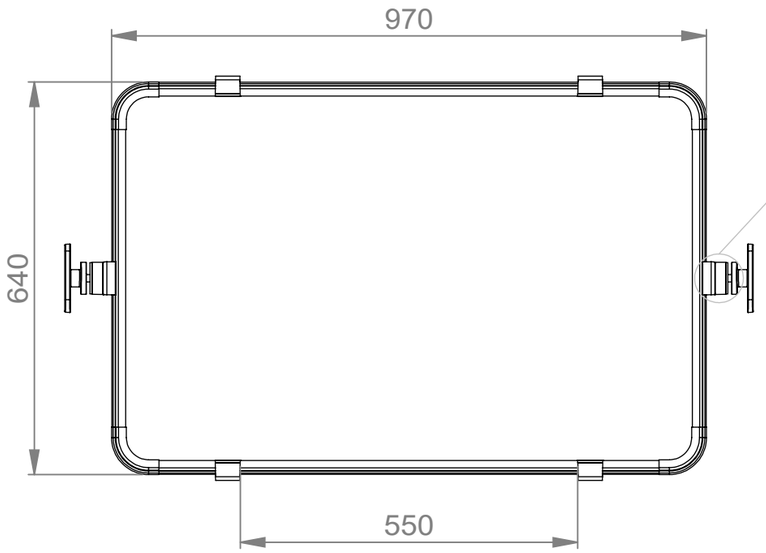

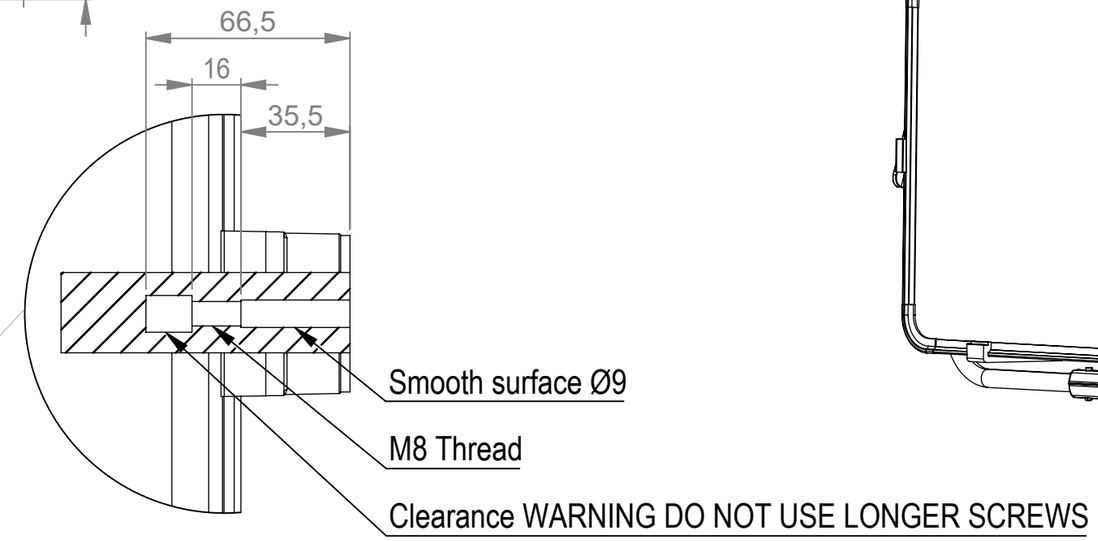

Interface for Twist Handle attachment
SCALE (1 : 2)

Projection		
Date 2026.03.01		
Profoto	Description Profoto ProPanel3x2 Public 2D drawing	Scale 1:10
		Sheet 1(1)